RI SAS™ & RI SAS-SE™ Air Syringes

User Manual

+45 46 79 02 02 | sales@coopersurgical.com | fertility.coopersurgical.com

Research Instruments Ltd
Bickland Industrial Park, Falmouth, Cornwall TR11 4TA, UK
Document 6-34-500UM(3) | DRF 5707 | 30th March 2021 | Print: A5

CooperSurgical®

CONTENTS

SECTION 1 - PREFACE 1

SECTION 2 - INTRODUCTION TO THE SAS & SAS-SE 2

Intended Use 2

Micromanipulator Compatibility 2

Installation 3

SECTION 3 - SAFETY WARNINGS AND CAUTIONS 3

Warnings 3

Cautions 3

Glossary of Safety and Information Symbols 4

SECTION 4 - PRODUCT OVERVIEW 5

Inventory 5

Hardware Overview 6

SAS Specification Table 6

SECTION 5 - SET-UP 7

SECTION 6 - BASIC OPERATION 8

Equilibrating a Micropipette 9

SECTION 7- TROUBLESHOOTING 10

SECTION 8 - CARE & MAINTENANCE 12

Cleaning 12

Liquid Spills 12

Fitting a New O-ring (SAS model only) 13

SECTION 9 - WARRANTY INFORMATION AND LIMITS ON LIABILITY 14

SECTION 10 - RETURNING PRODUCT FOR REPAIR 16

Customer Service Contact details 17

Contact details for customers in the USA 17

Obligation to Inform 18

Feedback 18

SECTION 1 - PREFACE

Thank you for choosing the SAS or SAS-SE.

This manual provides all the necessary information to use the Research Instruments SAS and SAS-SE syringes. The syringes should be operated by trained personnel only. All sections of this manual should be read and understood fully before use. Please see the Intended Use in Section 2 for more information.

If you are unsure of any of the information contained in this manual, contact Research Instruments (RI) or an authorised representative before attempting to use the syringe.

In no event does RI assume the liability for any technical or editorial errors of commission, or omission; nor is RI liable for direct, indirect, incidental, or consequential damages arising out of the use or inability to use this manual.

RI is constantly updating its products, and therefore reserves the right to introduce changes in design, equipment and technical features at any time.

The SAS & SAS-SE manual belongs with the syringes and should be passed on with the syringes if relocated to another clinic.

The use of ™ in this manual indicates a trademark of Research Instruments Ltd. Any other brand names referred to in this manual are trademarks of their respective owners.

Research Instruments Ltd,
Bickland Industrial Park, Falmouth, Cornwall TR11 4TA, UK

EC REP CooperSurgical Distribution
B.V. Celsiusweg 35, 5928 PR Venlo, The Netherlands

SECTION 2 - INTRODUCTION TO THE SAS & SAS-SE

Intended Use

To provide aspiration capabilities to micropipettes during Assisted Reproductive Technology (ART) procedures.

Intended User

Trained clinical professional with locally relevant qualifications.

Clinical Benefits

To facilitate treatment of a patient by manipulation or modification of the patients' reproductive cells and / or tissue in vitro.

Intended Patient Population

For those who require assisted reproduction treatments to improve their chances of a healthy pregnancy.

Applicable Part Numbers

Part Number	Description
6-34-520	SAS Air Syringe
6-34-530	SAS-SE Air Syringe

Micromanipulator Compatibility

The SAS and SAS-SE can be used in conjunction with any micromanipulation system that is fitted with industry standard 1mm OD micropipettes. However CooperSurgical, Origio or TPC micropipettes are recommended.

Installation

Please follow the installation instructions to ensure the correct operation of your syringe. Installation of the SAS and SAS-SE syringes should be carried out by qualified and trained personnel only. Incorrect installation could result in poor overall performance.

Relocation of this syringe should be treated as a re-installation and should, therefore, be carried out by trained personnel.

The only user-serviceable parts are those detailed in the Troubleshooting and Care and Maintenance Sections.

SECTION 3 - SAFETY WARNINGS AND CAUTIONS

Warnings

High pressure can be generated in the system when using small diameter micropipettes, viscous fluids, or if a micropipette becomes blocked. This may cause micropipettes to shoot out of the holder. Before releasing the pipette from its holder, release the pressure in the syringe by pressing the release button on the top.

To minimise the risk of injury:

- Never point the pipette towards yourself or anyone else
- Always make sure the pipette is securely mounted in the holder before use
- Release the pressure before loosening the micropipette tip
- When removing a pipette from the holder, be sure to hold the pipette between your fingers as the holder tip is loosened

A self-adhesive warning label is supplied, which should be placed in a prominent position as close as possible to the device when in use

Cautions

The syringes should be operated by qualified and trained personnel only.

3

Glossary of Safety and Information Symbols

Source: ISO 15223-1

Symbol	Meaning
CE	In accordance with the European Medical Device Regulation 2017/745
EC REP	Authorized representative in the European Community
	Consult instructions for use
	WARNING: Indicates a potentially hazardous situation which, if not avoided, could result in serious injury or death.
	CAUTION: Indicates the need for the user to consult the instructions for use for important cautionary information such as warnings and precautions that cannot, for a variety of reasons, be presented on the device itself.
	Manufacturer
	Date of manufacture
MD	Medical device
REF	Catalogue or Part number
SN	Serial number
UDI	Unique Device Identifier

SECTION 4 - PRODUCT OVERVIEW

Welcome to the user manual for the Research Instruments SAS and SAS-SE screw-actuated air syringes. This manual covers set-up, operation and maintenance of the syringes.

For air-assisted micro-injection and micro-aspiration, the SAS and SAS-SE syringes apply suction or pressure to a micropipette. They can generate high pressure when required, but they are sensitive enough to balance the capillary action of media in a micropipette and to precisely position a sample.

The syringes are a complete unit incorporating a heavy base, which enables them to be ergonomically positioned for operation in conjunction with the control lever of a micromanipulator. Aspiration/ injection is obtained by turning the rotator.

Inventory

SAS-SE

- 1 x SAS-SE
- 3 metres of tubing
- SAS and SAS-SE user manual
- Pressure warning label

SAS

- 1 x SAS
- 3 metres of tubing
- 2 Spare O-rings
- SAS and SAS-SE user manual
- Pressure warning label

4

Hardware Overview

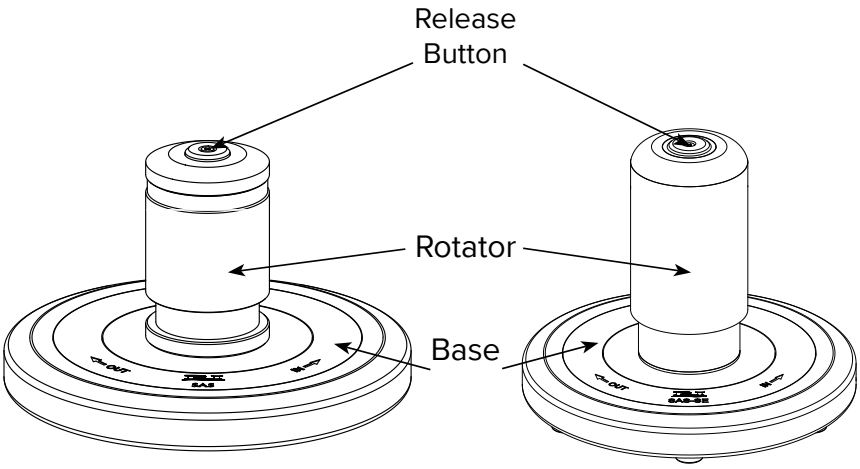

SAS SAS-SE

SAS Specification Table

Description	SAS	SAS-SE
Piston stroke	23mm	30mm
Max displaced volume*	18.5ml	24ml
Volume displaced per turn*	1.6ml	1.6ml
Weight	1.4kg	1.7kg
Overall dimensions	125mm diameter x 95mm high	125mm diameter x 120mm high

*At atmospheric pressure only. Due to pressure differences, the actual volume displaced in the pipette is considerably smaller, and will vary according to the geometry of the micropipette and the viscosity of the media used.

SECTION 5 - SET-UP

⚠ Do not fill the syringe or tubing with oil.

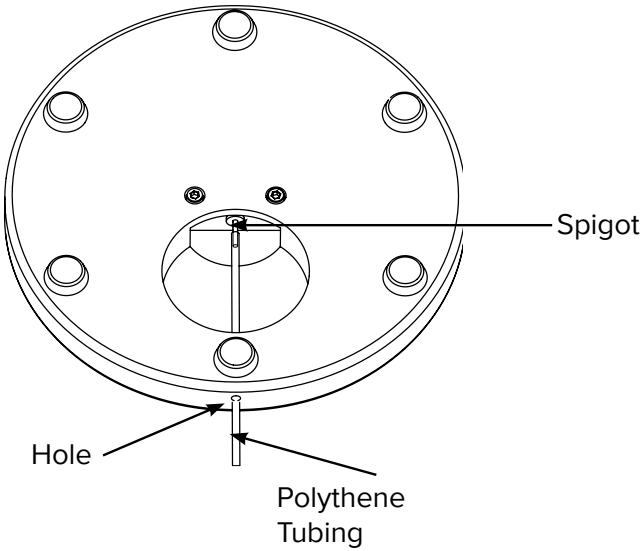

1. To set up the syringe, turn the unit upside down.
2. Insert the end of the hard polythene tubing through the hole in the side of the base.
3. Push the tubing over the spigot, ensuring that the tubing is securely fitted.
4. The other end of the tubing is fitted to the micropipette holder. Please refer to the manipulator or micropipette holder instructions for how to connect the tubing to the micropipettes.
5. Equilibrate the system (see page 9).

It is recommended that SAS and SAS-SE syringes are positioned on the bench adjacent to the micromanipulation system controls. It is common to position the syringes on opposite sides of the micromanipulation system to their respective pipettes to enable the syringe and micromanipulation system controls to be used at the same time.

SECTION 6 - BASIC OPERATION

Aspiration/Injection is obtained by turning the rotator on top of the syringe.

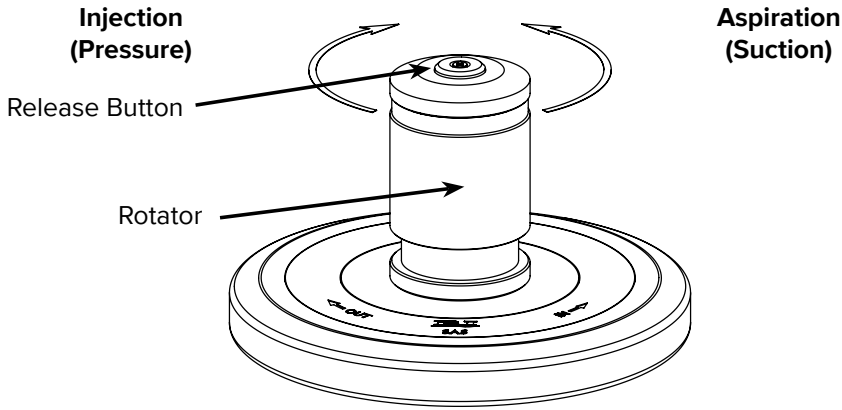

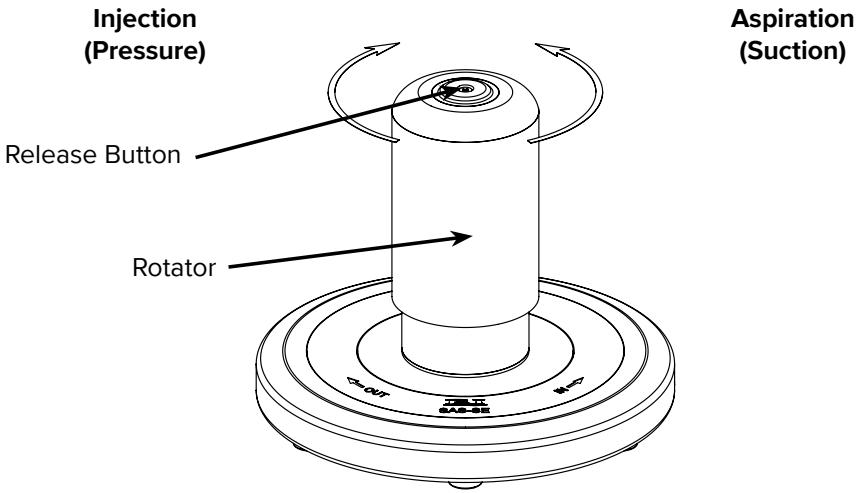

> ⚠ High pressure can be generated in the system when using small diameter micropipettes, viscous fluids, or if a micropipette becomes blocked. This may cause micropipettes to shoot out of the holder. Press the release button to release the pressure before loosening the micropipette holder tip to remove a micropipette.

Equilibrating a Micropipette

This procedure balances the pressure in the syringe with the capillary action of the pipette to allow optimum control of sperm injection.

The following is a typical procedure. However, other methods are possible such as using medium without PVP. Individual clinics may develop their own procedures.

1. Place a drop of PVP/media in a Petri dish.
2. Ensure the rotator is near the lower end of the movement. Turn the rotator down (clockwise) if necessary.
3. Press the release button.
4. Using the micromanipulator set-up lever, lower the micropipette into the PVP/media drop. Do not allow the PVP/media to enter the tubing. The level of the PVP/media should always be clearly visible inside the pipette.
5. Turn the rotator anti-clockwise (i.e. upwards) five to six turns for an injection pipette and one turn for a holding pipette.
6. Press the release button.
7. Leave to equilibrate for 1-2 minutes.
8. Equilibration is successful when the meniscus of the media inside the micropipette is static, and responds to small movements of the control knob in either direction.

   Additionally, under high 20x or 40x magnification, expel the media almost to the end of the pipette to see the meniscus responding to the control of the syringe.

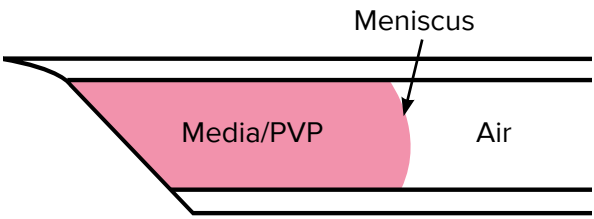

SECTION 7- TROUBLESHOOTING

Problem	Possible cause	Solution
Unable to aspirate/inject. No pressure. Too much lag. Sperm moves slowly up the pipette.	Micropipette may be blocked.	Change the micropipette for a new one.
	The specimen may have dried up.	Warm stage heat can dry an unprotected or insufficiently protected specimen. A generous layer of mineral oil over the specimen in its medium drop will protect it from drying out.
	There may be an air leak in the injector system.	Check in order: Check that the nose piece of the micropipette holder has been tightened properly. Check the connection of the hard plastic tubing onto the syringe spigot. If the connection is loose cut off approximately 10mm from the tubing and reconnect. See Section 5 - Set up on page 7 Check the connection of the hard plastic tubing onto the micropipette holder. If the connection is loose, cut off approximately 10mm from the tubing and reconnect. See Section 5 - Set up on page 7 Check the O-ring in the micropipette holder nose piece. If the O-ring is worn out due to a long period of use it will need replacement. Refer to manipulator or micropipette holder instructions for further information about replacing the O-ring seal.

Problem	Possible cause	Solution
Sperm is moving in/out of the pipette too quickly.	Check the micropipette holder tip is completely clear. Any tiny shards of broken glass will break the seal.	Remove the micropipette holder tip from the tubing. Separate the parts as required to remove all shards of glass.
	The O-ring inside the rotator may need replacing (SAS only).	See Section 8 Care and Maintenance on page 12 for instructions.
	Your injection micropipette needs equilibrating.	Please see instructions for equilibrating a micropipette on page 9
	Equilibration is not complete or the rotator has been turned too far.	Press the release button. Capillary action will cause the PVP/medium to move up the pipette. This can be countered with a small clockwise movement of the rotator to balance the pressure.

If the problem persists, contact Customer Service or your distributor for assistance.

SECTION 8 - CARE & MAINTENANCE

Cleaning

If oil or media is introduced into the system it will need to be dismantled and cleaned. This should be entrusted to a CooperSurgical technician only.

Use a dust cover to protect the syringes when not in use. This will minimise the need for cleaning. We recommend and supply a non-PVC dust cover as plasticisers commonly used in flexible PVC are known to be embryotoxic.

Always remove any spilt liquid or dirt immediately and keep instruments clean and dry.

Liquid Spills

If liquid is spilt inadvertently, dry the instrument immediately. If it is suspected that liquids have gone inside the instrument then contact Customer Service for advice before use.

⚠ Do not fill the syringe or tubing with oil.

Fitting a New O-ring (SAS model only)

After a lot of use the O-ring may need replacing to ensure smooth and accurate operation.

1. Remove the rotator by unscrewing it completely, revealing the O-ring. The O-ring is situated in a recess in the lower part of the syringe.
2. Ease the old O-ring off the mechanism.
3. A spare O-ring will have been supplied with the original purchase.
4. Apply Krytox™ GPL205 grease, available from RI, to the O-ring recess.
5. Place the new O-ring in the recess, apply a little more Krytox GPL205 grease on top of the O-ring and re-assemble.

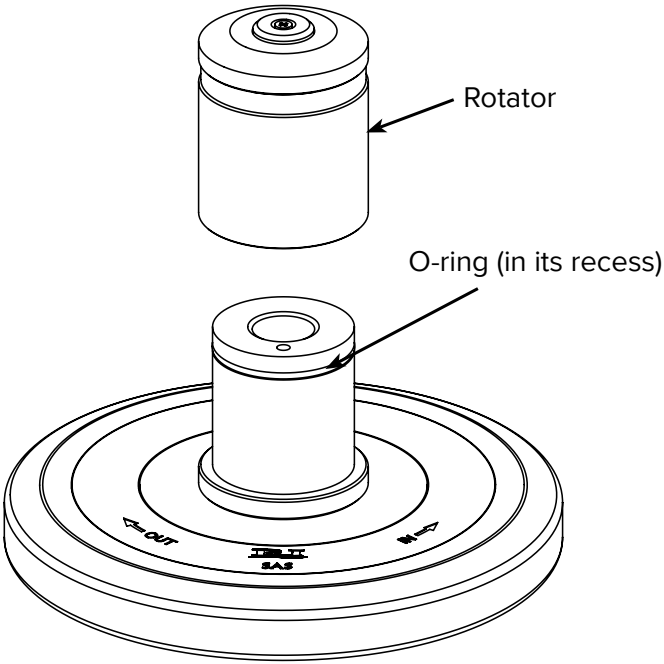

SECTION 9 - WARRANTY INFORMATION AND LIMITS ON LIABILITY

CooperSurgical warrants that this item will be free from defects in materials and workmanship for one year from the date of installation. If CooperSurgical determines that the product fails to conform to that warranty during the one-year period, CooperSurgical will repair or replace the product, at CooperSurgical's discretion, free of charge.

To return the product to CooperSurgical, a customer must comply with CooperSurgical's Returned Goods Policy described in this manual and the warranty requires the customer to return the product to CooperSurgical in accordance with the CooperSurgical Returns Instruction. CooperSurgical will return products (that it repaired or replaced under warranty) to the same customer who returned those products, at CooperSurgical's expense F.O.B. the customer's facility. Under all other circumstances, CooperSurgical will return products to the same customer who returned those products at the customer's expense.

CooperSurgical's warranties do not cover damage caused by misuse, improper care, improper use of chemicals or cleaning methods, loss, theft, use of non-authorized parts, servicing by non-authorized personnel or negligent or intentional conduct on the part of the owner or user of the product, nor do they cover normal wear and tear or general maintenance. Any modifications or changes to a product will void that product's warranty. CooperSurgical's warranties do not apply to any single- or limited-use, disposable or consumable components or items.

CooperSurgical is not responsible for, and the owner and operator of the product shall defend, indemnify and hold harmless CooperSurgical from and against, all claims, damages, and other losses resulting from the improper servicing, maintenance, repair, use or operation of the product or the owner or operator's negligence or willful misconduct, and use of inadequate packing and packaging when returning product for repair.

The above warranties are in lieu of, and CooperSurgical hereby disclaims, all other warranties, express or implied, written or oral, with respect to CooperSurgical products, including the warranties of merchantability and fitness for a particular purpose. No terms, conditions, understandings or agreements that purport to modify the above warranties or that make any additional warranties for any CooperSurgical product shall have any legal effect unless made in writing and signed by an authorized CooperSurgical corporate officer.

CooperSurgical shall not under any circumstances be liable for lost profits, damages from loss of use or lost data, or indirect, special, incidental or consequential damages under its warranties or otherwise for any claim related to CooperSurgical products, even if CooperSurgical has been advised, knew or should have known of the possibility of such damages. CooperSurgical's liability with respect to a product covered by a warranty or otherwise shall be limited in all circumstances to the purchase price of that product.

SECTION 10 - RETURNING PRODUCT FOR REPAIR

Please refer to the 'Troubleshooting' section in this manual before returning the product. If problems continue with the device, please follow these instructions:

Returned Goods Policy

Goods will be accepted for return for the following reasons:

- If shipment was made without the customer's authorization or order
- If incorrect items were shipped
- If defective items were shipped
- If defective goods are covered by the standard warranty

To return product, please contact Customer Service for a Returned Merchandise Authorization (RMA) number. Items will not be accepted without an RMA number. Please have the following information:

- Reason for returning the goods
- Quantity, description, part number, serial number of the goods
- Date of receipt of order
- Customer's purchase order and the CooperSurgical or Origio invoice number

All used products must be cleaned and sterilized prior to shipment. A signed decontamination declaration may be required.

All products should be carefully and adequately packed, preferably in original packaging. Replacement items or additional repairs will be invoiced.

All packaging should be clearly labeled with the RMA number and statement "Urgent – Returned Items for Repair". If authoriszation to return a product is granted you will be provided with a return address label.

Shipments must be sent prepaid by the customer and insured for their full value during shipping. Freight collect shipments will not be accepted, and goods will be returned to the sender.

If the customer intends to return equipment ordered in error, the following restocking charges and terms will apply:

- 25 percent within 60 days from date of shipment
- Goods must be returned unused, in the original carton, and in marketable condition
- Refurbishing and replacement charges will be added to the restocking charges for damaged or missing items
- No return after 60 days
- No refund on sterile, single-use disposable products

Customer Service Contact details

Tel: +45 46 79 02 02

Fax: +45 46 79 03 02

E-mail: sales@coopersurgical.com

fertility.coopersurgical.com

Contact details for customers in the USA

Tel: 800-243-2974

Fax: 800-262-0105

fertility.coopersurgical.com

Obligation to Inform

If a serious incident is suspected from using the SAS & SAS-SE Air Syringes, report the details of the incident to CooperSurgical via phone number +1 203-601-5200 Ext 3100 or by email at ProductSurveillance@coopersurgical.com and to the local Health Authority in your country. A serious incident may have caused or contributed to a death, a delay in a procedure which resulted in death or serious injury, or a malfunction that could have caused an adverse event.

Feedback

Thank you for purchasing an RI product. To help CooperSurgical develop the best tools for ART, we rely on customer feedback. If you have any suggestions for how we can improve our products or the information we provide with them, please send them to Customer Service. Your feedback will help us develop the product and supporting materials to meet your future needs.

Thank you.